NOTES: UNLESS OTHERWISE SPECIFIED.

1. ALL DIMENSIONS ARE IN INCHES (±.06) AND MILLIMETERS (±1.) INCHES[mm]
2. LEAVE APPROX. 2" OF CLEARANCE BEHIND INSTRUMENT FOR ELECTRICAL CONNECTIONS.
3. PANEL CUT-OUT REQUIRED: 7.25 [184.2] H X 8.80 [223.5] W

REVISIONS				
REV	DESCRIPTION	DATE	APP.	REV. BY
1	INC ECO 02-0212	1/23/03	AA	EI
2	INC ECO 04-0093	3/23/05	JR	VF

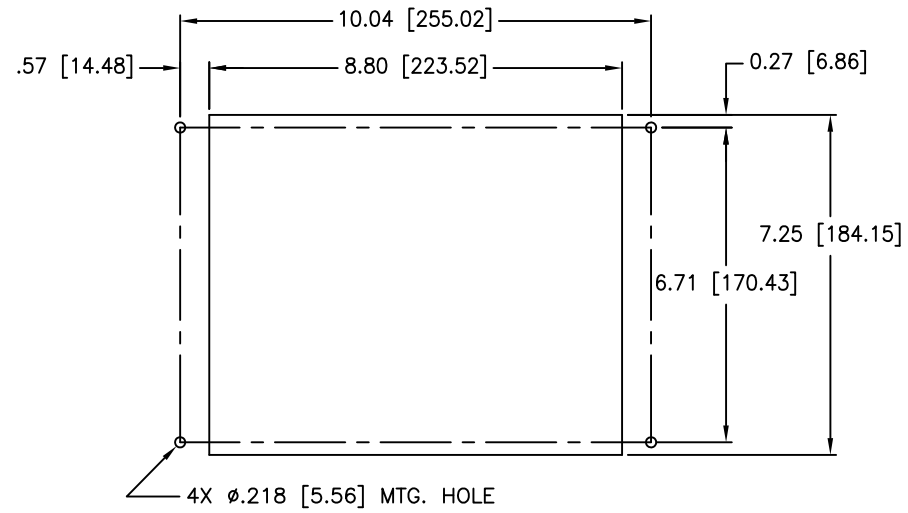

RECOMMENDED PANEL CUTOUT

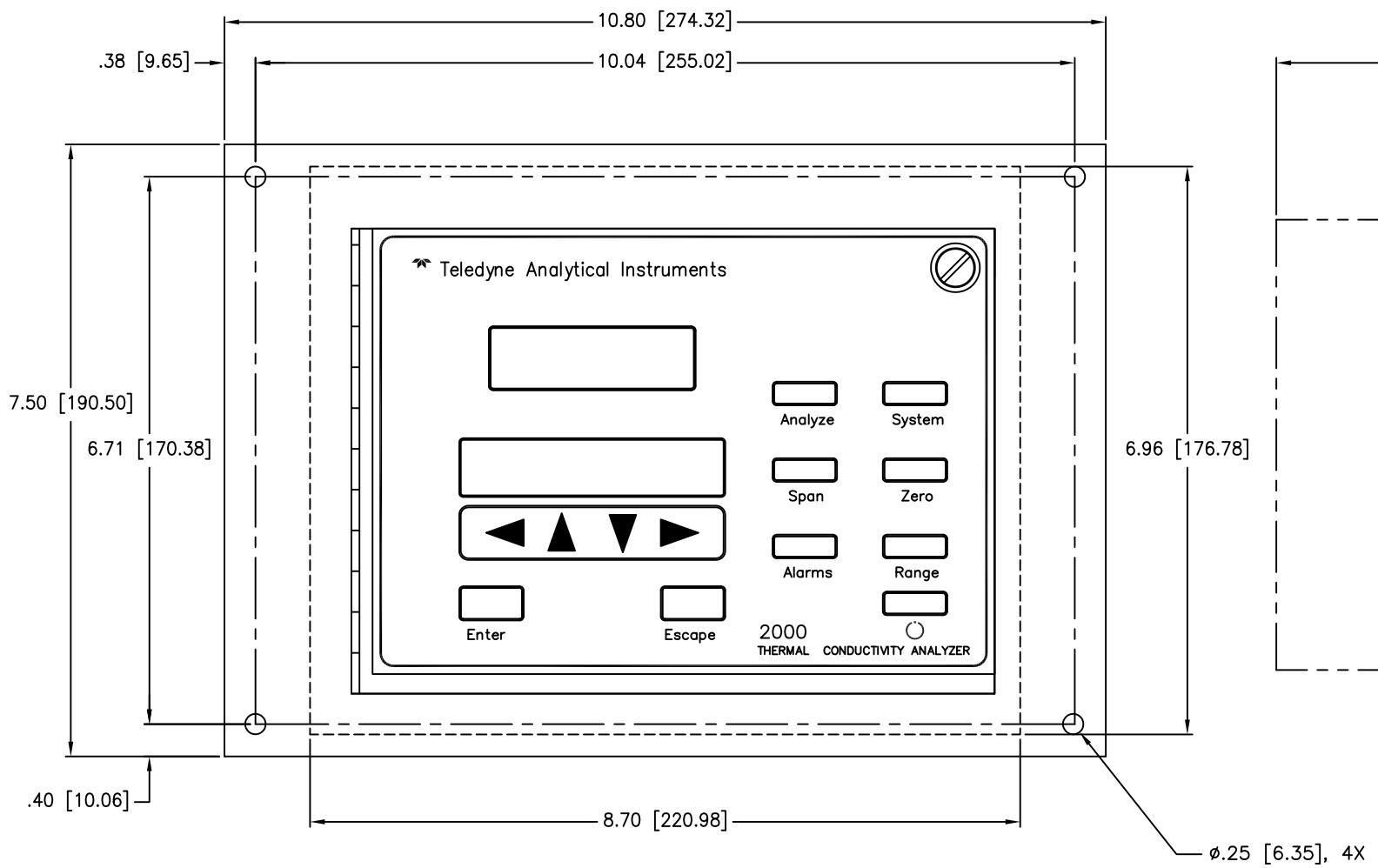

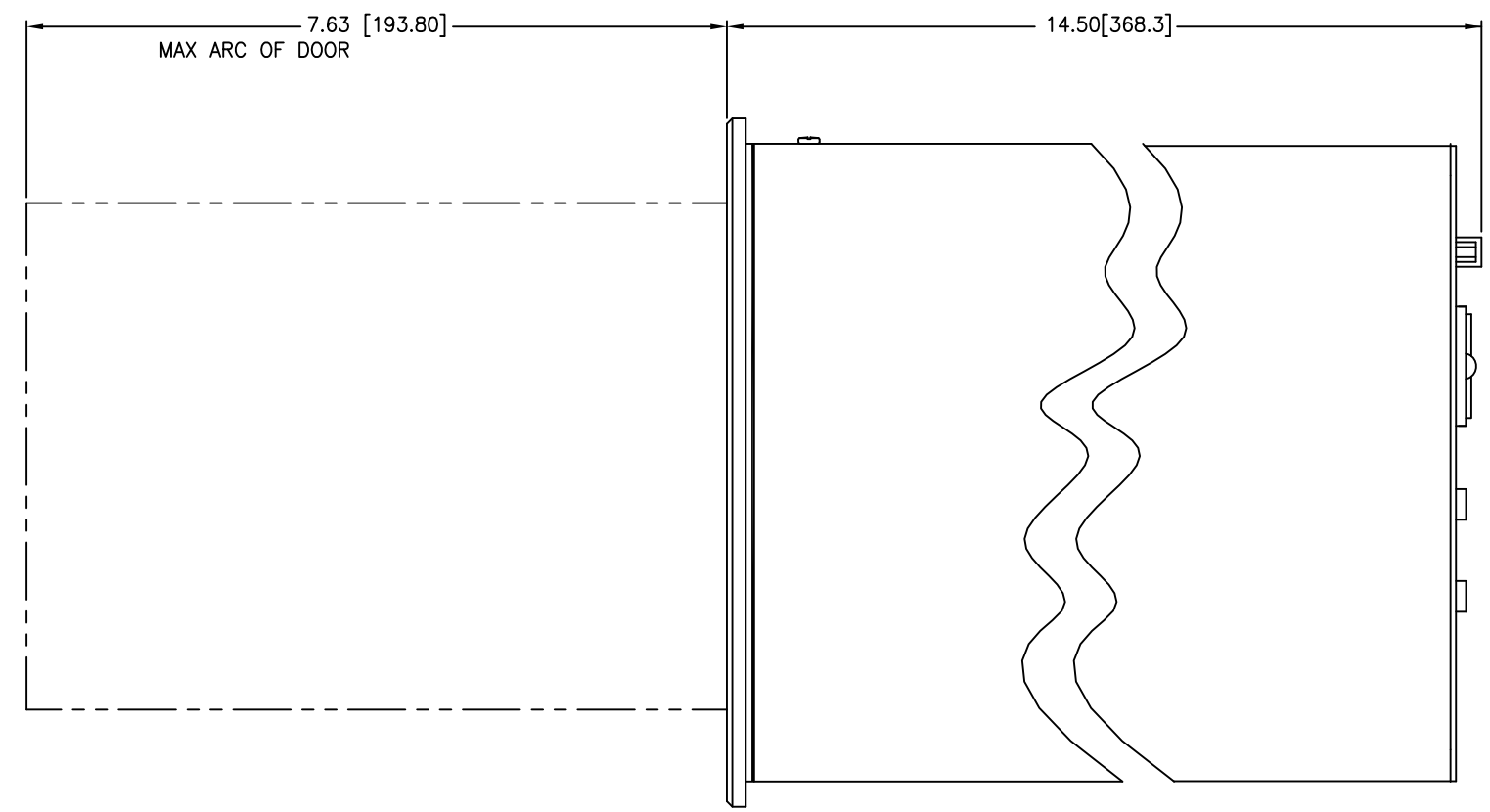

Use and Disclosure of Data

Information contained herein is classified as EAR99 under the U.S. Export Administration Regulations.
Export, reexport or diversion contrary to U.S. law is prohibited.

ITEM	QTY	PART NO.	DESCRIPTION

BILL OF MATERIAL

DO NOT SCALE DWG

TOLERANCE UNLESS OTHERWISE SPECIFIED: ANGULAR ±1/2°; LINEAR .X = ±.1, .XX = ±.02, .XXX = ±.010

THIS DRAWING IS THE PROPERTY OF TELEDYNE INSTRUMENTS AND CONTAINS CONFIDENTIAL INFORMATION. IT IS NOT TO BE COPIED, REPRODUCED OR USED WITHOUT WRITTEN PERMISSION.

TELEDYNE INSTRUMENTS
Analytical Instruments
A Teledyne Technologies Company
CITY OF INDUSTRY, CALIFORNIA 91748

	SIGNATURES	DATE
N/	DRFT: VM CRUZ	2/18/97
I/	CHK:	
O/	APPR:	
P/	ENGR: VICTOR CRUZ	
F/	C.O.	
REFERENCE	CAD ID D67915-2	

TITLE: OUTLINE DIAGRAM STANDARD MODEL 2000

SCALE 1:1 | SIM NONE | SHEET 1 OF 1

MATL. NONE | DWG NO. D-67915 | REV 2