NOTES: UNLESS OTHERWISE SPECIFIED.

(1) FOR PRESSURE REDUCING UNIT OUTLINE DIAGRAM, SEE B-71572. SET REGULATOR TO 20 PSIG. SET RELIEF VALVE TO 30 PSIG.

REVISIONS				
REV	DESCRIPTION	DATE	APP.	REV. BY
0	INITIAL RELEASE	1/25/00	RKJ	--
1	ADDED CUSTOMER NOTES	3/23/00	RKJ	RKJ
2	CHANGED PER CUSTOMER REQUEST	5-16-00	RKJ	RKJ

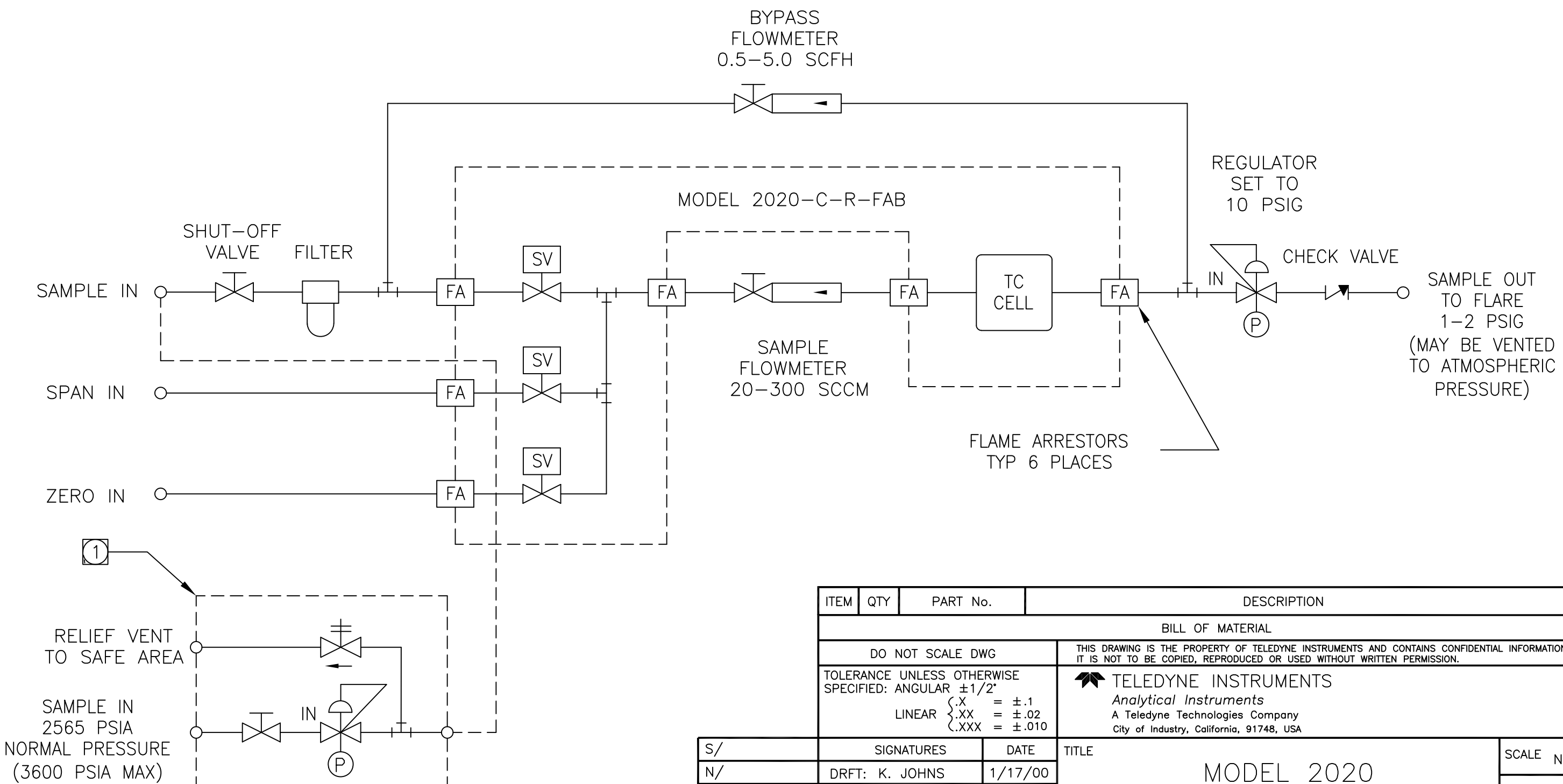

ITEM	QTY	PART No.	DESCRIPTION

BILL OF MATERIAL

DO NOT SCALE DWG

THIS DRAWING IS THE PROPERTY OF TELEDYNE INSTRUMENTS AND CONTAINS CONFIDENTIAL INFORMATION. IT IS NOT TO BE COPIED, REPRODUCED OR USED WITHOUT WRITTEN PERMISSION.

TOLERANCE UNLESS OTHERWISE SPECIFIED: ANGULAR ±1/2°
LINEAR .X = ±.1, .XX = ±.02, .XXX = ±.010

TELEDYNE INSTRUMENTS
Analytical Instruments
A Teledyne Technologies Company
City of Industry, California, 91748, USA

S/	SIGNATURES	DATE
N/	DRFT: K. JOHNS	1/17/00
I/	CHK:	
P/	APPR:	
O/ D-71567	ENGR: KIM JOHNS	
F/ D-71568	C.O.: 12009	
REFERENCE	CAD I.D. B71566-0	

TITLE: MODEL 2020 ANALYZER SAMPLE SYSTEM PIPING DIAGRAM

SCALE: NONE
SIM: B-71205
SHEET: 1 OF 1
MATL.: NONE
DWG NO.: B-71566
REV: 2

TAG NO.
AT-07-4A
AT-07-4B